GE Healthcare

MicroCal™ VP-ITC system

Operating Instructions

Original Instructions

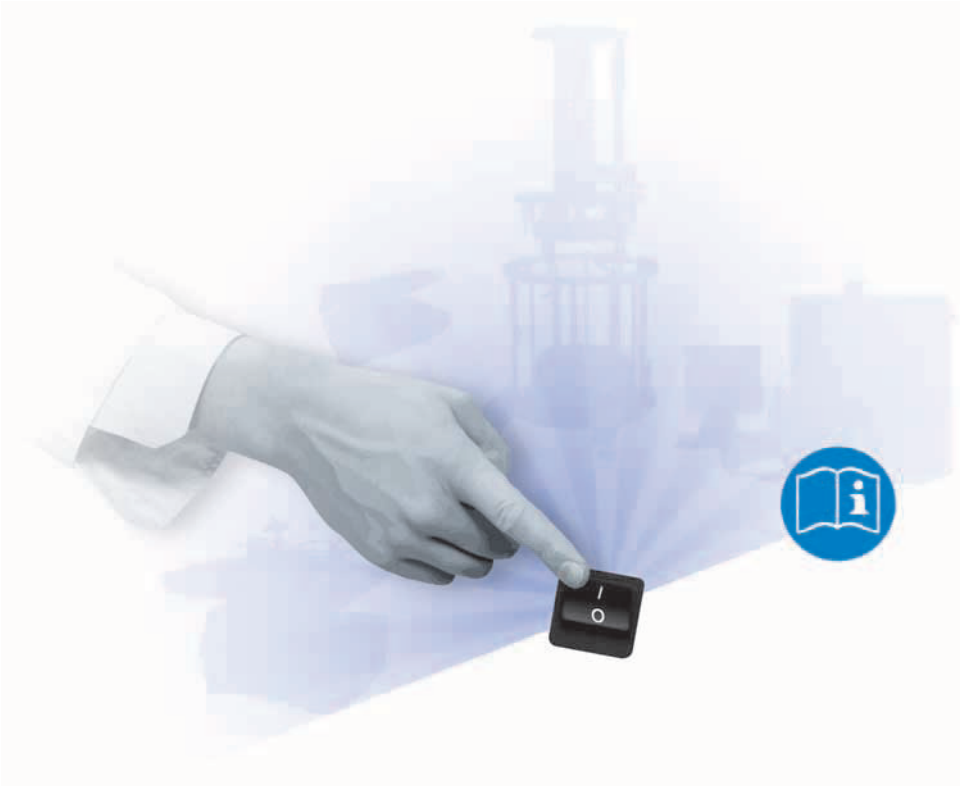

Table of Contents

1 Introduction

Purpose of the Operating Instructions

The Operating Instructions provide you with the instructions needed to handle MicroCal VP-ITC in a safe way.

Prerequisites

In order to operate MicroCal VP-ITC safely and according to the intended purpose the following prerequisites must be met:

- You should have a general understanding of the use of a personal computer running Microsoft™ Windows™ in the version provided with your product.
- You should be acquainted with the use of general laboratory equipment and with handling of biological materials.
- You must read the Safety Instructions in *Chapter 2* of these Operating Instructions.
- The system should be installed according to the instructions in *Chapter 3* of these Operating Instructions.
- You should understand the concepts of titration calorimetry.
- You must read and understand these Operating Instructions.

In this chapter

This chapter contains important user information and a general description of MicroCal VP-ITC and its intended use.

1.1 Important user information

Read this before using MicroCal VP-ITC

All users must read the Safety Instructions in *Chapter 2* of these Operating Instructions before installing, using or maintaining the system.

Do not operate MicroCal VP-ITC in any other way than described in the user documentation. If you do, you may be exposed to hazards that can lead to personal injury and you may cause damage to the equipment.

Intended use

The MicroCal VP-ITC is an Isothermal Titration Calorimeter system designed for biomolecular interaction studies in research applications.

The MicroCal VP-ITC system is intended for research use only and shall not be used in any clinical procedures or for diagnostic purposes.

Safety notices

These Operating Instructions contain WARNINGS, CAUTIONS and NOTICES concerning the use of the product, with meanings as defined below.

WARNING
WARNING indicates a hazardous situation which, if not avoided, could result in death or serious injury. It is important not to proceed until all stated conditions are met and clearly understood.

CAUTION
CAUTION indicates a hazardous situation which, if not avoided, could result in minor or moderate injury. It is important not to proceed until all stated conditions are met and clearly understood.

NOTICE
NOTICE indicates instructions that must be followed to avoid damage to the product or other equipment.

Notes and tips

Note: *A Note is used to indicate information that is important for trouble-free and optimal use of the product.*

Tip: *A tip contains useful information that can improve or optimize your procedures.*

Typographical conventions

Software texts and commands are identified by ***bold italic*** text. A colon is used to separate menu levels (e.g. ***File:Open*** refers to the ***Open*** option in the ***File*** menu).

1.2 Regulatory information

This section lists the directives and standards that are fulfilled by MicroCal VP-ITC.

Manufacturing information

Requirement	Content
Name and address of manufacturer	GE Healthcare Microcal Products Group 22 Industrial Drive East Northampton, Massachusetts 01060 USA
Place and date of declaration	Northampton, Massachusetts, USA, January 2010
Identity of person authorized to sign Declaration of Conformity	See EC Declaration of Conformity
Date of manufacture and serial number	The serial number contains the code for the year of the manufacture of the instrument. The serial number takes the form of xx.yy.zzz where yy = year of manufacture.

CE Conformity

Directive	Title
2006/42/EC	Machinery Directive (MD)
2006/95/EC	Low Voltage Directive (LVD)

Directive	Title
2004/108/EC	ElectroMagnetic Compatibility (EMC) Directive

International standards

Standard	Description	Notes
EN 61010-1, IEC 61010-1, CAN/CSA-C22.2 no. 61010-1	Safety requirements for electrical equipment for measurement, control and laboratory use	
EN 61326-1 (CISPR Group 1, Class A)	EMC emissions and immunity requirements for measurement, control and laboratory use	Harmonized with 2004/108/EC
EN-ISO 12100-1, 12100-2	Safety of machinery – Basic concepts, general principles and design	Harmonized with 2006/42/EC
EN-ISO 14121-1, 14121-2	Safety of machinery – Principles of risk assessment	Harmonized with 2006/42/EC

CE marking

The CE marking and the corresponding Declaration of Conformity is valid for the instrument when it is:

- used as a stand-alone unit, or
- connected to other CE-marked instruments, or
- connected to other products recommended or described in the user documentation, and
- used in the same state as it was delivered from GE Healthcare, except for alterations described in the user documentation or explicitly authorized by GE Healthcare.

Regulatory compliance of connected equipment

Any equipment connected to MicroCal VP-ITC should meet the safety requirements of EN 61010-1/IEC61010-1 or relevant harmonized standards. Within the European Union, connected equipment must be CE-marked.

Instrument safety compliance specifications

Microcal VP-ITC calorimeters carry the CUE Safety Certification Mark, authorized by TÜV America, a division of TÜV Süddeutschland, to signify that:

1 The instrument has been tested by an accredited Certification Body and meets applicable Canadian electrical safety standards/requirements (CSA/SCC).

2 The instrument has been tested by an NRTL (Nationally Recognized Testing Laboratory) and meets applicable United States electrical safety standards/ requirements (ANSI/UL).

The instrument has been tested by a Competent and Notified Body for applicable EU Directives and meets applicable safety standards/requirements (EN/IEC).

1.3 Instrument

The MicroCal VP-ITC (Isothermal Titration Calorimeter) unit directly measures heat evolved or absorbed in liquid samples as a result of mixing precise amounts of reactants. A spinning syringe is utilized for injecting and mixing of reactants. Spin rates are user selectable; the usual range is 0 to 1000 rpm. The normal temperature operating range is 2°C to 80°C. Wetted cell surfaces are Hastelloy, which are resistant to most solutions; however, strong acids should be avoided.

Sample and reference cells are accessible for filling and cleaning through the top of the unit. The sample cell is on the right as one faces the front of the unit. A pair of identical coin shaped cells is enclosed within two shields; the inner shield is referred to as the jacket. Access stems extend from the top exterior of the instrument to the cells. Both the coin shaped cells and the access stems are completely filled with liquid during operation. This requires approximately 1.8 mL per cell even though the working volume of the cell is only 1.4 mL.

.

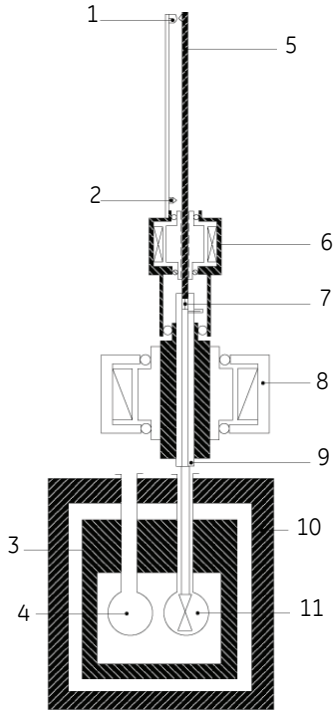

Figure 1-1. Principle drawing.

Part	Description
1	Sensor

Part	Description
2	Sensor
3	Inner shield
4	Reference cell
5	Lead screw
6	Injector
7	Plunger
8	Stirring
9	Syringe
10	Outer shield
11	Sample cell

Temperature differences between the reference cell and the sample cell are measured, calibrated to power units and displayed to the user as well as saved to disk. The data channel is referred to as the DP signal, or the differential power between the reference cell and the sample cell. This signal is sometimes thought of as the "feedback" power used to maintain temperature equilibrium. Calibration of this signal is obtained electrically by administering a known quantity of power through a resistive heater element located on the cell.

In a typical experiment, the syringe containing a ligand is titrated (injected) into the cell containing a solution of macromolecule. An injection which results in the evolution of heat (exothermic) within the sample cell causes a negative change in the DP power, since the heat evolved chemically provides heat that the DP feedback is no longer required to provide.

The opposite is true for endothermic reactions. Since the DP has units of power, the time integral of the peak yields a measurement of thermal energy, ΔH. This heat is released or absorbed in direct proportion to the amount of binding that occurs. When the macromolecule in the cell becomes saturated with added ligand, the heat signal diminishes until only the background heat of dilution is observed.

With the MicroCal VP-ITC system the entire experiment takes place under computer control. The user inputs the experimental parameters (temperature, number of injections, injection volumes) and the computer carries out the experiment. Origin® software is then used to analyze the ITC data using fitting models to calculate reaction stoichiometry (n), binding constant (K_D), enthalpy (ΔH) and entropy (ΔS).

ThermoVac

The MicroCal VP-ITC is delivered with a ThermoVac so that you can easily degas samples. The ThermoVac is capable of thermostatting a sample at any temperature

from 0°C to 80°C, pulling a vacuum of 28.4 inches of mercury(-0.96 bar) and stirring the sample using small magnetic stir bars. The ThermoVac is also used to aggressively clean the MicroCal VP-ITC cells (*Section 5.4*).

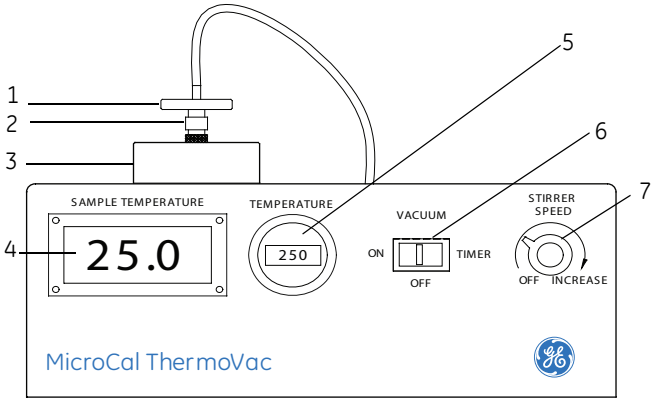

Figure 1-2. *Front view of ThermoVac.*

Part	Description
1	Filter
2	Luer lock connector
3	Vacuum cover
4	Current temperature
5	Set temperature
6	Vacuum power switch
7	Magnetic stirring RPM

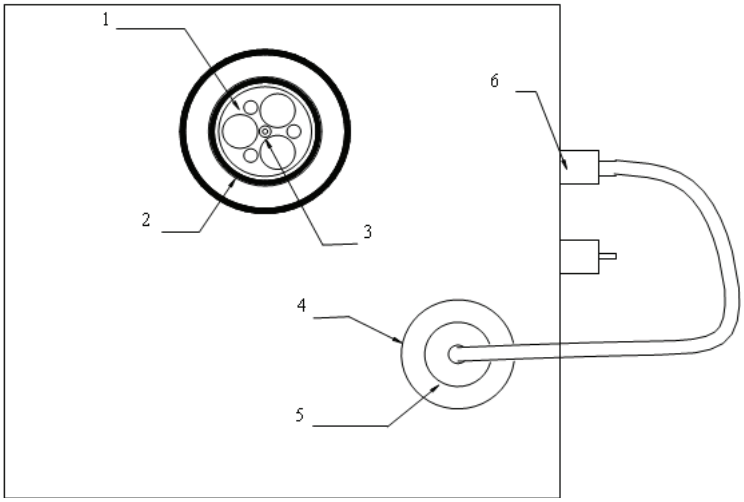

Figure 1-3. ThermoVac top view.

Part	Description
1	Tube holder
2	Vacuum sealing O-ring
3	Tube holder removal screw
4	Vacuum cover
5	In-Line filter
6	Vacuum port

1.4 Control software

VPViewer™ 2000

In order for the system to initialize properly, all components must be powered up in the correct order. First, boot up the computer and log in to Windows. Once Windows has started power on the MicroCal VP-ITC by operating the switch at the rear of the unit. After several seconds, open the MicroCal VP-ITC user interface software, called VPViewer. This software controls the function of the ITC itself. A real-time copy of Origin® will open automatically, as well as VPViewer. This copy of Origin is reserved for real-time data display, so for analysis, the user should open a separate instance.

At startup, the line just below the menus will read "***System Initiation - Please Wait***", which is the current status of the instrument. After a few seconds, the system will begin heating or cooling to the preset temperature, and the power LED on the front of the cell will light.

2 Safety instructions

The points below are intended to enhance your safety awareness and to draw your attention to risks which only you, the operator, can prevent. While GE Healthcare works to ensure that the instrument is designed and tested to be as safe as possible, proper handling is also critical. The operators should be responsible people trained in basic laboratory protocol, and they should be familiar with the possible hazards before operating this instrument. All instrument modifications should be performed only by personnel trained by GE Healthcare. Equipment damage, personal injury or even death may result if this equipment is operated, altered or maintained by untrained personnel or in an irresponsible or improper manner.

2.1 Safety precautions

Introduction

Before installing, operating or maintaining the system, you must be aware of the hazards described in the user documentation. Follow the instructions provided to avoid personal injury or damage to the equipment.

The safety precautions in this section are grouped into the following categories:

- General precautions
- Flammable liquids
- Personal protection
- Installing and moving the instrument
- System operation
- Maintenance

General precautions

WARNING!
Provide proper electrical power to the instrument. This should be 100 – 240 Volt, 50/60 Hertz alternating current, with a Ground Fault Circuit Interrupter (GFCI). Some power strips, including those provided by GE Healthcare, contain a GFCI. All power plugs and cords should be 3-prong, grounded cables or outlets.

WARNING!
In case of fire, unplug instrument. Make sure the rear power connector is always accessible.

WARNING!
Do not operate the MicroCal VP-ITC in any other way than described in the MicroCal VP-ITC manuals.

WARNING!
Use caution when using solutions near the instrument. If any liquid is spilled on or around the instrument, unplug the instrument immediately and wipe it up. If there is any possibility that liquid may have leaked into the instrument case, contact GE Healthcare immediately. Do not plug the instrument into any electrical outlet until the problem is resolved.

WARNING!
This instrument is not designed to the Medical Devices Directive 93/42/EEC and should not be used for medical purposes and/or in the diagnosis of patients.

NOTICE
The MicroCal VP-ITC cells are constructed out of Hastalloy. Strong acids must be avoided.

Using flammable liquids

WARNING!
A fume hood or similar ventilation system shall be used when flammable or noxious substances are used.

WARNING!
Fire Hazard. Before starting the system make sure that there is no leakage.

Personal protection

WARNING!
Always use protective glasses and other personal protective equipment (PPE) appropriate with the current application, to ensure personal safety during operation.

WARNING!
The operator should always follow proper laboratory procedures in handling and disposing of volatile or hazardous solutions. Please refer to MSDS requirements for chemical hazards and PPE requirements.

WARNING!
This instrument is used for a wide variety of experiments that can utilize potentially hazardous materials. Use of these could cause exposure to biological, chemical and radiation hazards depending on the user's experiments. Users should educate themselves about the samples they are using to avoid these hazards.

WARNING!
Contrad®70 (Decon 90) is highly caustic and is increasingly active at elevated temperatures. Use personal protective equipment for eyes, skin and clothing. All hazards are explained on the MSDS that arrives with the Contrad 70 (Decon 90).

Installing and moving the instrument

WARNING!
Power cord. Only use power cords delivered or approved by GE Healthcare.

WARNING!
Do not block the ventilation inlets or outlets on the system.

WARNING!
Installing the controller. The computer should be installed and used according to the instructions provided in the documentation included in the shipment.

WARNING!
Replace fuses ONLY with the same type and rating as the fuses provided in the original shipment.

WARNING!
Access to power switch and power cord. Do not block the rear and side panel of the instrument. The Power switch must always be easy to access. The power cord must always be easy to disconnect.

NOTICE
Disconnect power. To prevent equipment damage, always disconnect power from the MicroCal VP-ITC before an instrument is removed or installed or a cable is connected or disconnected.

System operation

WARNING!
All solutions in the cells must be cooled down below 40°C before removal. Any higher temperature may cause the syringe to break, and will increase the dangers of most hazardous solutions.

WARNING!
Do not place vessels containing liquid on top of the instrument. Spilled liquid is an electrical hazard.

NOTICE
Never allow liquid in the cells to freeze. The expansion of the liquid can distort the cells and rupture the most critical sensor, causing irreparable damage.

NOTICE
The MicroCal VP-ITC instrument should always be moved in its normal operating orientation. Other orientations will subject delicate sensors inside the instrument to stress.

Maintenance

WARNING!
Replace fuses ONLY with same type fuses. Several spare fuses are provided with the original shipment and the power receptacle is labeled with the correct type.

WARNING!
Repairs, alterations or modifications must only be carried out by specialist personnel, or with explicit directions from a GE Healthcare technician. Removal or modification of any cover or component could result in an unsafe or easily damaged instrument. The GE Healthcare service department will be happy to answer any questions and provide parts and service when necessary.

WARNING!
Only spare parts that are approved by GE Healthcare may be used for maintaining or servicing the system.

WARNING!
Disconnect power. Always disconnect power from the from the instrument before replacing any component on the instrument, unless stated otherwise in the user documentation.

WARNING!
Hazardous chemicals during maintenance. When using hazardous chemicals for cleaning, wash the system with a neutral solution in the last phase or step.

WARNING!
Decontaminate the equipment before decommissioning to ensure the removal of all hazardous residues.

2.2 Labels

Labels on the instrument

The illustration below shows an example of the identification labels attached to the rear of the MicroCal VP-ITC instrument.

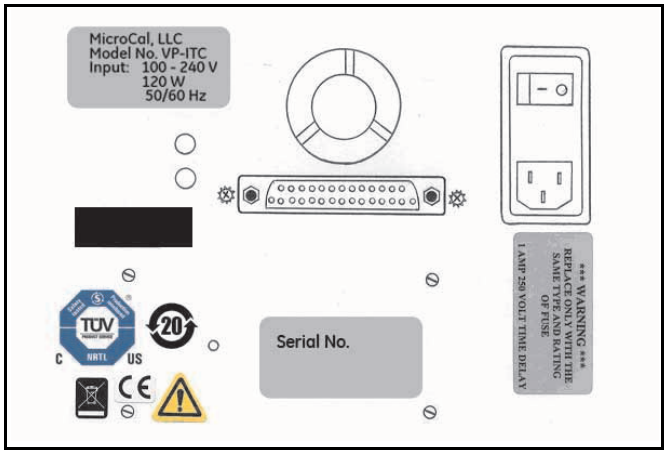

Figure 2-1. Back panel of instrument.

ThermoVac

The ThermoVac contains, where appropriate, safety symbols and labels as described below.

Symbols used in safety labels

	The system complies with the requirements for electromagnetic compliance (EMC) in Australia and New Zealand.
	Warning! Read the user manual before using the system. Do not open any covers or replace parts unless specifically stated in the user manual.
	The system complies with applicable European directives.

Labels concerning hazardous substances

	This symbol indicates that the waste of electrical and electronic equipment must not be disposed as unsorted municipal waste and must be collected separately. Please contact and authorized of the manufacturer for information concerning the decommissioning of equipment.
	This symbol indicates that the product contains hazardous materials in excess of the limits established by the Chinese standard SJ/T11363-2006. Requirements for Concentration Limits for certain Hazardous Substances in Electronics.

2.3 Emergency procedures

In an emergency situation, do as follows to stop the run:

Disconnect the equipment from the power outlet.

Power failure

MicroCal VP-ITC

- The run is interrupted immediately, in an undefined state.
- The data collected up to the time of the power failure is saved.

Controller

- The controller shuts down, in an undefined state.
- The MicroCal VP-ITC run is interrupted immediately, in an undefined state.

2.4 Recycling procedures

The equipment shall be decontaminated before decommissioning and all local regulations shall be followed with regard to scrapping of the equipment.

Disposal, general instructions

When taking the MicroCal VP-ITC system out of service, the different materials must be separated and recycled according to national and local environmental regulations.

Recycling of hazardous substances

The MicroCal VP-ITC instrument contains hazardous substances. Detailed information is available from your GE Healthcare representative.

Disposal of electrical components

Waste of electrical and electronic equipment must not be disposed as unsorted municipal waste and must be collected separately. Please contact an authorized representative of GE Healthcare for information concerning the decommissioning of equipment.

3 Installation

NOTICE
It is recommended that the installation of the MicroCal VP-ITC instrument be performed by GE Healthcare personnel.

This section provides information about the installation of MicroCal VP-ITC.

Figure 3-1. MicroCal VP-ITC complete system.

Any equipment connected to the MicroCal VP-ITC must fulfill applicable standards and local regulations.

3.1 Site requirements

The MicroCal VP-ITC with Computer Controller requires about 1 meter of normal bench space (ca. 70 cm wide). This location should be away from strong drafts, room temperature fluctuations, intense sunlight, vibrations and strong electrical or magnetic fields (as may be produced by an NMR, microwave oven, large motors or refrigeration units). In addition the mains power source (100 to 240 VAC) should be properly grounded and free from voltage fluctuations, harmonic distortions, power dips and spikes. The AC power line should be dedicated to the MicroCal VP-ITC system and should not share that power with additional equipment.

Although, the power filtering in the MicroCal VP-ITC instrument is adequate for most laboratory environments, some disturbances may affect the performance of the instrument and it may be necessary to have the AC Mains power source evaluated (see table below) or install a power conditioner. Since power source problems can be manifested in many different ways, it is not possible to recommend a power conditioner for all situations. It is recommended that you test a power conditioner, at your location, before you purchase it. If you believe you are experiencing power source related problems, please contact a GE Healthcare field engineer.

Table 3-1. Power supply requirements.

AC Mains Requirements	
Specification	**Requirement**
Voltage Regulation	100 to 240 VAC
Frequency	50/60 Hz
Power	120 Watts
Fuses	(2) 1 Amp 250 Volt Time-Delay
Protective earth terminals	Internal/External marked

It is emphasized that room temperature fluctuations (i.e. maximum 2.5 °C) due to the cycling on/off of heating and cooling systems, strong air currents, sunlight directly on the instrument and through space electromagnetic waves may cause subtle performance problems.

Table 3-2. Environmental requirements.

Environmental (Operating) requirements	
Temperature	10°C to 28°C
Humidity	≤ 70% RH
Atmospheric Pressure	700 to 1060 hPa

3.2 Transport

CAUTION
Lift the MicroCal VP-ITC instrument in the upright position. Do not use the front panel cover as a lifting handle.

Before moving the system:

- Disconnect all cables and tubing connected to peripheral components and liquid containers.
- Remove all items from the top of the system.
- Lift the system under the two sides.

3.3 Unpacking

The MicroCal VP-ITC is delivered in protective packing material and shall be unpacked with great care.

Check the equipment for damage before starting assembly and installation.

Document any damage and contact your local GE Healthcare representative.

3.4 Setup

Arrange the components on the desktop similar to the picture of the system (see *Figure 3-1*). The computer may be on either side depending on convenience. Follow the instructions below for assembly.

CAUTION
Lift the MicroCal VP-ITC instrument in the upright position. Do not use the front panel cover as a lifting handle.

CAUTION
Before connecting the hardware, make sure the controller PC is off.

Connect main data cable

The main data cable connects the MicroCal VP-ITC to the controller. The cable is well-labeled and has a single 37-pin female connector on one side (marked "Cell"), and two 37-pin female connectors on the other side (marked "J1" and "J2").

1. Plug the single 37-pin female connector marked "Cell" into the rear of the MicroCal VP-ITC cell. See *Figure 3-2* below. The two connectors on the split end of the cable are marked "J1" and "J2" and plug in to the PC.
2. Plug the J2 connector into the A/D board, which is labeled "J2" and is the slot on the left.
3. Plug the J1 connector into the D/A board, which is labeled "J1" and is the slot immediately to the right of the J2 slot.

Connect 9-pin serial pipette cable

The serial cable has two 9-pin serial connectors; one connector is female and the other is male. The female end is to be attached to the serial port (Com 1 or Com A) of the Computer Controller. The male end is to be attached to the serial plug on the back of the pipette controller/stirring base on the MicroCal VP-ITC.

Note: *Failure to connect the serial connectors correctly will cause the MicroCal VP-ITC system to not operate properly.*

1 Connect the female end of the serial cable to the Computer Controller at the serial port.

2 Connect the male end of the serial cable to the serial connector on the back of the pipette controller/stirring base on the MicroCal VP-ITC (see *Figure 3-2*).

Note: *Earlier versions of the MicroCal VP-ITC require a slightly different serial cable and connection sequence. Contact GE Healthcare for further information.*

Figure 3-2. Cable connections.

Connect the power cord to the IEC 320 inlet power receptacle (see *Figure 3-2*) on the back of the cell. Connect the power plug only to a main power supply receptacle with a 3-wire protective Earth ground and a Ground Fault Circuit Interrupter (GFCI)**.**

WARNING!
Provide proper electrical power to the instrument. This should be 100 – 240 Volt, 50/60 Hertz alternating current, with a Ground Fault Circuit Interrupter (GFCI). Some power strips, including those provided by GE Healthcare, contain a GFCI. All power plugs and cords should be 3-prong, grounded cables or outlets.

Assemble pipette

The pipette assembly consists of the injection syringe with pre-mounted top syringe clamp, a bottom syringe clamp, the syringe holder and the pipette injector.

NOTICE
Take appropriate precautions to ensure that the long needle of the syringe is not bent. If the needle is bent too far, it will remain bent and the syringe will need to be replaced before proceeding with experiments.

NOTICE
Never attempt to couple/decouple the pipette from the syringe assembly unless the pipette plunger is in the open port position (all the way up). Failure to follow this recommendation may result in a bend in the pipette screw. Even a slight bend will result in improper operation of the pipette.

To assemble the pipette, please do the following (please refer to diagrams in *Figure 3-3*):

Note: *The height must be adjusted for any syringe that was not part of the original shipment of your MicroCal VP-ITC instrument. Please see Section 5.5 for instruction on adjusting the height of the syringe.*

1 Insert an injection syringe into the syringe holder until the top syringe clamp is firmly seated against the top of the syringe holder, being careful not to bend the needle against the inside of the holder. (See *Figure 3-3*)

2 Insert the bottom syringe clamp over the syringe needle onto the glass part of the syringe.

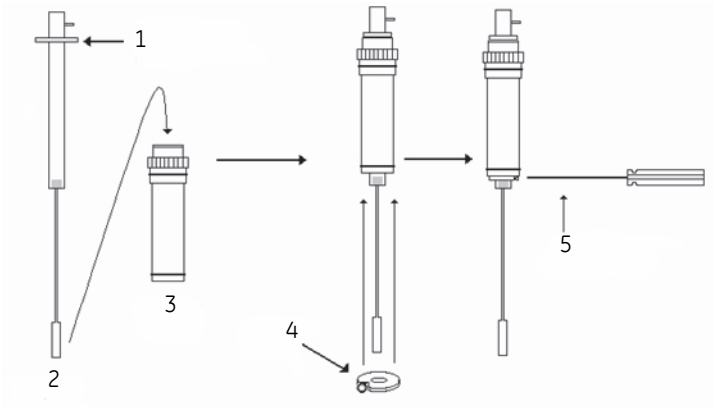

Figure 3-3. Pipette assembly.

Table 3-3. Parts in *Figure 3-3*.

1	Pre-mounted syringe clamp
2	Injection syringe
3	Syringe holder
4	Syringe clamp
5	0.050" Ball point hex driver

3 Make sure the top syringe clamp is still seated against the top of the syringe holder, hold the bottom syringe clamp tightly against the bottom of the syringe holder and gently tighten the set screw using the accessory 0.050" hex driver.

NOTICE
Do not overtighten the set screw, as too much pressure will cause damage. Tighten the screw gradually until the bottom syringe clamp can no longer move freely, then stop tightening.

4 Insert the syringe holder into the pipette holder (attached to the side of the MicroCal VP-ITC).

5 Bring the pipette injector directly above the syringe holder, start bringing the injector down while observing the plunger tip of the pipette injector to insure that it is being inserted into the hole in the glass barrel of the injector syringe, then mate the screws of the pipette injector to the locking collar of the syringe holder.

6 With your fingers, turn the locking collar until it is fully tightened on the pipette injector.

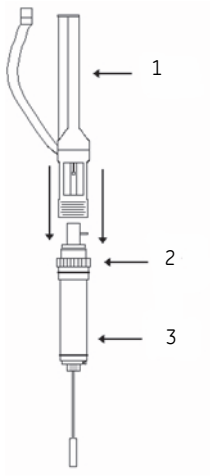

Figure 3-4. Pipette assembly.

1	Pipette injector
2	Pipette locking collar
3	Syringe holder

Note: *When the locking collar is fully tightened there should be only a couple threads of the pipette injector visible.*

7 Plug the connector of the pipette into the back of the pipette controller/stirring base (see *Figure 3-2*) to complete the pipette assembly.

ThermoVac

Connect the power cord to the IEC 320 inlet power receptacle (see *Figure 3-5* below) on the back of the ThermoVac. Connect the power plug only to a main power supply receptacle with a 3-wire protective Earth ground and a Ground Fault Circuit Interrupter (GFCI). Connect the vacuum cap (shown in *Figure 3-5*) to the port labeled Vacuum.

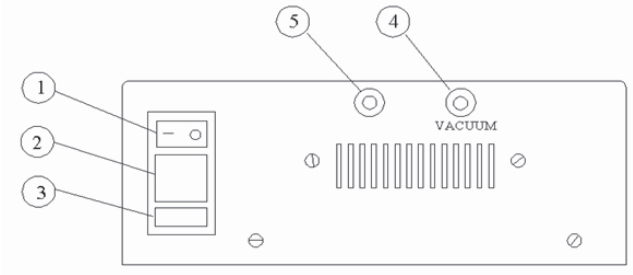

Figure 3-5. Rear panel controls.

Table 3-4. Rear panel of ThermoVac.

Part	Description
1	Power main switch
2	Power fuses
3	IEC 320 inlet power receptacle
4	Vacuum port
5	Pressure port

3.5 Validation

After installation it is recommended that a titration of a known system be performed to test that the instrument has been installed correctly.

4 Operation

This chapter covers the basic aspects of MicroCal VP-ITC operations:

NOTICE
This chapter assumes a thorough knowledge of the topics discussed in all previous sections of this manual. If you have not read these sections, please do so before attempting this tutorial.

4.1 Procedure before a run

Note: *See Section 1.4 for control software.*

On/Off instructions

Turning the MicroCal VP-ITC on

Once the MicroCal VP-ITC unit has been cabled to the PC, it is ready to use. At the rear of the unit is a power on/off switch, which functions as the master power switch and must be in the "on" position. It can be turned to "off" when the MicroCal VP-ITC will not be used for long periods of time: (i.e., weekends, holidays, etc.)

NOTICE
The user interface program, VPViewer, has to be running for the cell to function properly even though the power switch and the power LED are on.

Leaving the power on

During frequent "on" periods, the master power may be left on as long as the cell user interface program, VPViewer, is running. The software automatically ensures that the system does not incur any damage and keeps the MicroCal VP-ITC cell ready.

Periods of inactivity

GE Healthcare recommends that the VPViewer application be closed and the master power be turned off when the system will not be used for extended periods of time.

4.2 Basics of performing a run

In order to perform a basic ITC titration experiment, the user must load the samples into the cell and syringe, set up the run parameters, and click ***Start***.

Cell filling

The cells are filled using the long needled 2.5 mL glass syringe, by filling from the bottom of the cell to the top. The tops of the access tubes are visible within the cell port. The sample cell is in the center and the reference is offset to the left, as viewed from the front of the instrument.

1 To load the sample cell, gently insert the glass Hamilton syringe into the sample cell until it touches the bottom.

2 Pull up on the plunger until bubbles are being pulled from the cell, and there is no more liquid.

3 Remove and empty the syringe. Clean the syringe if necessary.

4 Pull approximately 1.8 mL of sample into the syringe, and tap the syringe glass so that all air is at the top volume of the syringe. Do not allow air to be put into the cells.

5 After removing the bubbles, insert the syringe into the cell and gently touch the bottom of the cell with the tip of the syringe needle.

6 Raise the needle tip about 1 mm off the bottom of the cell, and hold it there until finished filling. Do not raise the syringe during the filling process.

7 Slowly inject solution into the cell until it spills out the top of the cell stem. Finish the filling with several small abrupt spurts of solution to dislodge any bubbles in the cells.

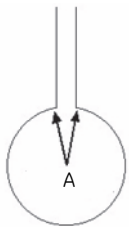

Figure 4-1. Bubble space zone.(A = Position where bubbles may rest).

8 Finally, lift the tip of the syringe to the cell port (just below the visible portion of the cell port) and find the ledge (See *Figure 4-2*) that is formed where the cell stem

meets the cell port. Place the syringe on the ledge at the top of the metal cell stem and remove the excess solution.

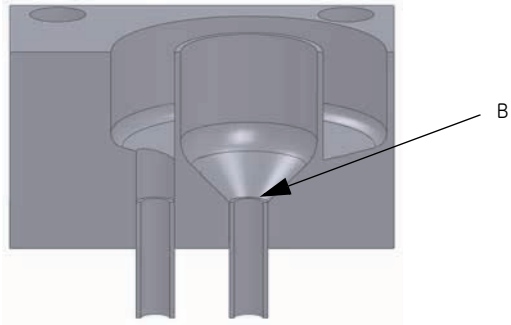

Figure 4-2. Cell stem ledge. (B = Ledge formed where the cell tube meets the plastic filling port)

If the reference cell needs refilling, follow the same procedure as for the sample cell.

Note: *There is no need to refill the ITC reference cell after each experiment. If the water was thoroughly degassed before filling, it may be good for a week or two with no attention.*

NOTICE
If the reservoir overflows during the filling procedure, the fluid may contaminate the stir motor bearing and damage it beyond repair. Care should be taken not to overfill the reservoir. If an overflow does occur, the injector should be removed and the bearings on the underside should be wiped dry. If internal contamination is suspected, please consult with GE Healthcare personnel for further recommendations.

Pipette filling

1 Degas the titrant for ~5 minutes and place in the pipette filling tube.

2 Place the pipette filling tube into the bottom of the stand (see *Figure 4-3*).

3 Carefully, insert the pipette into the pipette stand.

NOTICE
Be careful not to hit the long needle of the injection syringe against any object, as this could cause the needle to bend and expel some solution from the syringe and result in a poor first injection for the experiment. If the long needle is bent far enough it may cause a permanent deformation in the needle making the syringe unusable for future experiments.

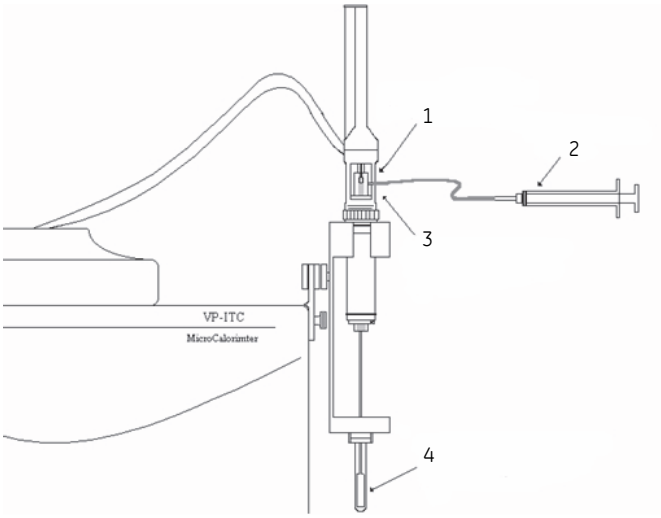

Figure 4-3. Pipette loading.

4 Select the ***ITC Controls*** tab. In the lower right corner is the ***Pipette Controls*** button.

5 Click on the ***Open Fill Port*** button.

6 The pipette will move the plunger of the injection syringe until the Teflon tip is just above the filling port of the syringe.

7 Attach the tubing of the plastic filling syringe to the filling port of the injection syringe.

8 Slowly withdraw the plunger of the plastic filling syringe to draw up the titrant solution until you see the solution exit through the top filling port.

9 Click on the ***Close Fill Port*** button as soon as liquid begins to exit the top filling port.

10 The pipette will lower the plunger of the injection syringe until the white Teflon tip is completely below the filling port (~ 4mm).

11 Remove the tubing of the plastic filling syringe from the filling port of the injection syringe.

12 Click on the ***Purge->ReFill*** button.

13 The pipette will depress the plunger of the filling syringe to inject the sample back into the filling test tube, then raise the plunger to refill the injection syringe. When the movement is complete, the tip of the injection syringe will be positioned to its original position, just below the filling port.

14 Click on the ***Purge->ReFill*** button again to repeat the purge/refill action.

15 The purpose of both purge/refill procedures is to dislodge any air bubbles from inside walls of the injection syringe (which may have occurred during the first filling) and expel them back into the titrant solution.

16 Carefully remove the pipette from its stand by picking it straight up, avoiding bending the long needle.

17 Carefully move the pipette so that it is directly above the centered sample cell stem (this is the hole on the right).

18 Carefully insert the pipette into the sample cell stem.

Watch the end paddle of the long needle to insure it is inserted directly into the access hole, hold the pipette vertical and slowly lower the pipette. When the pipette is almost completely inserted, push down slowly and firmly to seat the pipette.

Enter the desired run parameters into the VPViewer control software (see *Section 4.3* for more information), and click Start on the main toolbar to start the run. Real-time data will be displayed in the Origin window. Once a run has completed, the system should be promptly cleaned. See sections *5.1* and *5.2* for cleaning information.

4.3 Basic VPViewer controls

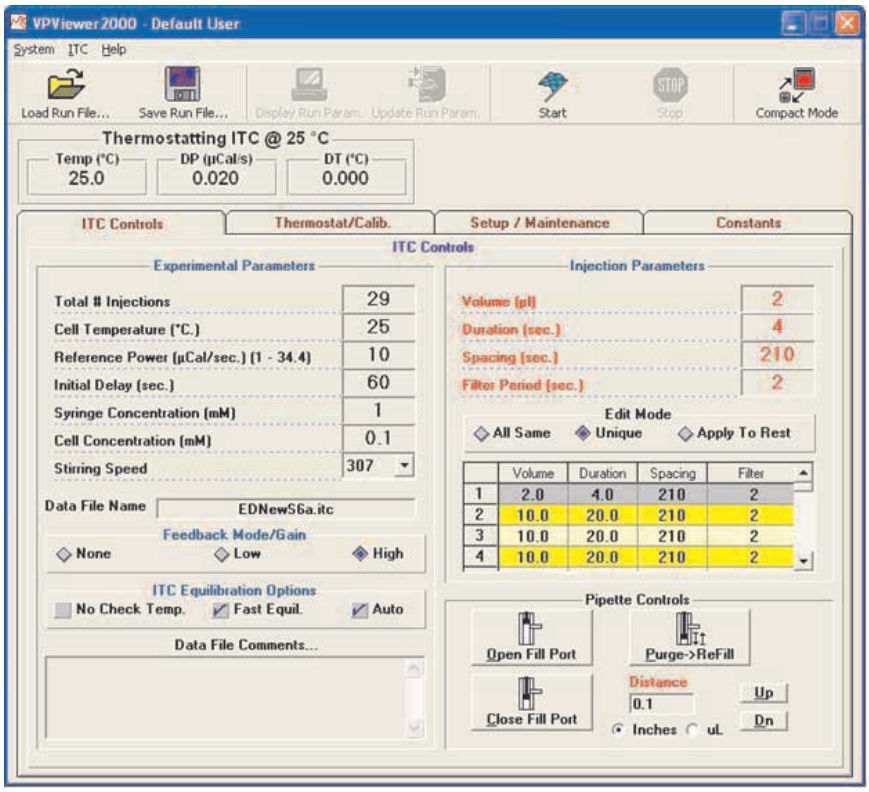

Figure 4-4. VPViewer.

The commonly used controls within VPViewer are in the ***ITC Controls*** tab. The top bar above this tab contains several buttons for opening, saving, and viewing run parameter files. The ***Load Run File*** button will display the file open dialog box, in which the user can select a file to load into the tab. Run parameters may be loaded from one of two types of files: a previous experiment's data file (*.itc) (the run parameters are extracted from the data file header), or a setup file (*.inj) which was previously saved using the ***Save Run File*** button.

Save Run File displays the file save dialog box which allows saving of the currently displayed run parameters. Once the parameters have been saved, they may be reloaded and reused in the future by selecting ***Load Run File*** as described above.

Display Run Parameters displays the current run parameters for the run in progress. This button is available only when the MicroCal VP-ITC is in a non-idle state.

Update Run Parameters updates the current run parameters for the run in progress. When the ITC is in a non-idle state, this button must be clicked for the run parameter changes to take effect. This button is available only when the MicroCal VP-ITC is in a non-idle state.

Note: *Only run parameters that have not yet been applied on the run in progress may be updated; all others will be ignored (i.e. after the stirring has commenced for an experiment, changes to the experimental stir speed will be ignored).*

The ***Total # Injections*** (500 is the maximum) sets the number of injections for the titration (ITC) experiment. The multiple-injection method requires a minimum of 10-15 injections. There are no negative consequences (except the time spent) to titrating past the point where all sites are saturated, and these last few injections can be used for control heat information. The single injection method uses one single longer injection.

The ***Cell Temperature*** box is used to set the desired run temperature for the experiment. Most runs are performed between 25°C (room temperature) and 37°C (human body temperature); although the instrument's operating range is 2°C to 80°C.

Throughout an ITC experiment, a small constant amount of power (equal to the ***Reference Power*** entered) is continuously supplied to the offset heater of the reference cell. This causes the DP feedback system to become positive to supply compensating power to the sample cell that will equilibrate the temperatures. During an experiment the DP baseline will equilibrate near the value entered in the ***Reference Power*** box. The reference power setting is often referred to as the baseline setting. The best choice for the reference power setting will be determined by the anticipated size and direction of the titration peaks. Large exotherms will require a large reference power setting (ca. 5 µCal/sec.) and large endotherms will require a very small reference power setting (ca. 0.5 µCal/sec.). When working with an unknown sample, a reference power of 2-3 µCal/second is best.

The ***Initial Delay*** refers to the time, in seconds, after the instrument has started a run and before the first injection. The standard parameter is 60 seconds; this is necessary to establish a baseline prior to the first injection.

The ***Syringe Concentration*** and ***Cell Concentration*** boxes are a place to enter the experimental concentrations. These concentration values are stored in the data file header and used for ITC data analysis. These values are used only during data analysis and an entry is not required to perform an experiment. Concentration can be entered and edited during post run data analysis in Origin.

Select the desired stirring rate from the drop down list (300 RPM is recommended for most ITC experiments). If the solution in the sample cell contains suspended particles (e.g. agarose beads), then faster stirring may be necessary.

In the ***Feedback Mode/Gain*** section, the three available modes are ***none***, ***low*** or ***high*** (High is recommended for most ITC experiments). The feedback modes can be described as active (***low*** or ***high***) or passive (***none***). High gain will provide the fastest response time, while passive mode (***none)*** will provide the highest sensitivity. Almost all ITC reactions will require using the high gain feedback mode. Monitoring of long, slow thermal process in the MicroCal VP-ITC (i.e. kinetics, metabolic rates) might benefit from using the passive or low gain feedback modes.

The ***Data File Comments*** box allows the user to enter comments about the experiment to be saved in the header of the data file for future reference.

The ***Injection Parameters*** group allows the user to define the volume, duration, spacing between injections, and the filter period for each injection. At the bottom of this group

is a summary table that lists these parameters, ordered by injection number. The user may select an injection to edit by clicking on a row to highlight it; the parameters for this injection can be entered into the text boxes (see below). Then, depending on the ***Edit Mode*** selected, the user may edit the text boxes to effect all injections (***All Same***), only the currently highlighted injection (***Unique***) or the currently highlighted injection and all the following injections (***Apply To Rest)***.

In the ***Volume*** box, the user may enter the volume of titrant (in µL), to be injected from the pipette into the sample cell for the selected injection(s).

In the ***Duration (sec.)*** box, the user may enter the time, in seconds, that the instrument will take to inject the titrant into the sample cell. VPViewer will generally default this value to be twice the number entered in the ***Volume*** text box. For Single Injection Method (SIM) experiments, the standard duration is ten times the volume.

In the ***Spacing (sec.)*** box, the user may enter the time, in seconds, between the beginning of the selected injection and the beginning of the next injection (or end of the run). This spacing must allow enough time between the injections to allow the DP signal to return to the baseline after an injection peak deflection. Typical values for this parameter (in high gain feedback mode) range from 90-180 seconds, depending on the size of the peak and the kinetics of the reaction. For Single Injection Method, the spacing should be 90 - 180 seconds greater than the duration (i.e. volume = 20 µl, duration = 200 seconds, spacing = 300 seconds).

The ***Filter Period (sec.)*** is the time period (in seconds) in which the data channel conversions are averaged to produce a single data point for plotting and saving.

For fast reactions, a filter period of 2 seconds is sufficient to obtain enough data points for representation of the peak for accurate integration of the area. For monitoring of very long, slow thermal processes, the filter period may be increased accordingly to avoid accumulation of excess data points. Although there may be a practical limit for a data set size, only available disk space would limit the number of data points that VPViewer is able to collect and save.

4.4 Real-time Origin

Note: *Experimental data is automatically saved to disc (*.itc file) and does not need to be saved with in Real-time Origin.*

This section describes the functionality of Origin for real-time display. When the software is opened, it will open the Origin project window VPITCPLOT.OPJ for real time data display. This project of Origin is dedicated to data display only, and should not be used for data analysis. Users should open a separate instance of Origin for ITC to perform data analysis.

Pictured below is the main Origin window for MicroCal VP-ITC data display.

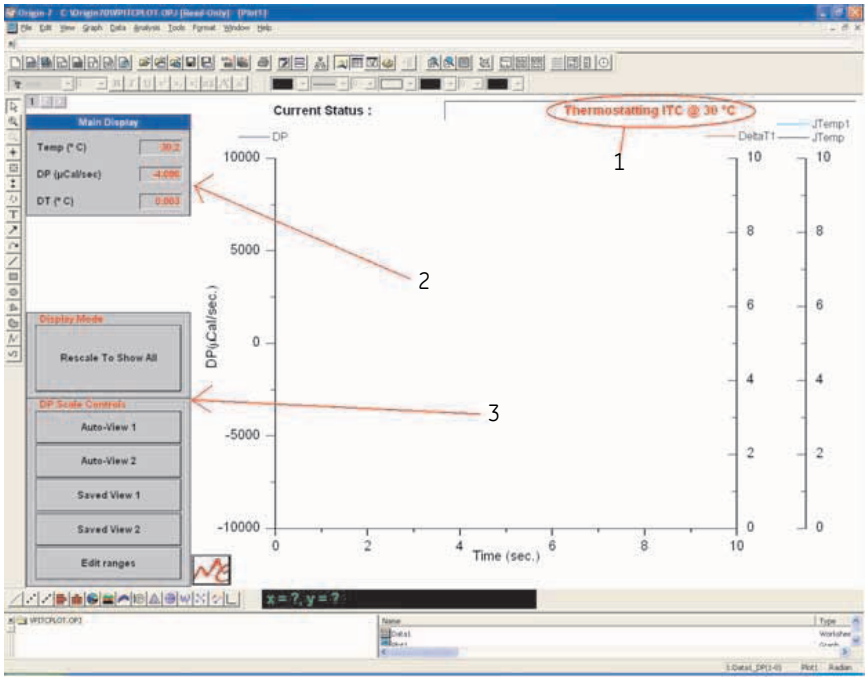

Figure 4-5. Real-time Origin.

Part	Description
1	ITC Cell status
2	ITC Numeric display
3	Buttons for ITC data display

The ITC cell status, the MicroCal VP-ITC numeric display and the buttons for MicroCal VP-ITC data tools (as indicated above) have been added for user convenience in viewing data generated by the MicroCal VP-ITC. Following is a description of each of these sets of tools.

Buttons for Data Display:

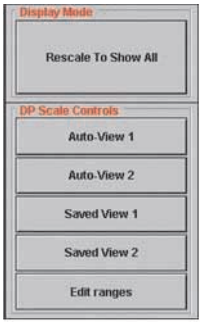

This group of buttons allows you to rescale the y-axis by simply clicking on a single button. ***Rescale To Show All*** shows all the data currently on the plot. ***Auto-View 1*** will rescale the y-axis so that the last DP data point plotted will be centered on a full scale determined by the entry in the ***Full Scale-Auto View 1*** text box in the ***Edit Ranges*** box (see description below). By default, it is 0.1µCal/sec. ***Auto-View 2*** rescales the y-axis to a second scale centered on the last DP data point plotted. By default, it is 1µCal/sec. ***Saved View 1*** rescales the y-axis to a specific range, specified in the ***Edit Range*** box. By default, the range is -1 to 1µCal/sec.

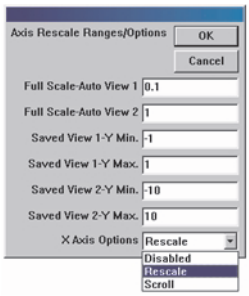

Saved View 2 rescales the y-axis to a second specific range. By default, the range is -10 to 10µCal/sec.

Edit Ranges opens a window that contains parameters to be used with the aforementioned buttons. In addition to the ***Auto View*** and ***Saved View*** entries, which are described above, the ***X Axis Options*** drop down list box controls the automatic re-scaling of the x-axis when the data exceeds the X Axis (time) display range. ***Disabled:*** Takes no action. Current data may be plotted off screen. ***Rescale:*** Extends the maximum X Axis setting by 25%, resulting in a larger display range.

Figure 4-6. Menus

Scroll: Extends the minimum and maximum X Axis setting by 25%, preserving the same range of the display, but always displaying the most recently plotted data. Click ***OK*** to exit and save any changes or ***Cancel*** to exit without saving any changes.

The ITC ***Main Display*** shows the same data channels as VPViewer: cell temperature, DP, and DT. The status bar shows the current state of the instrument and is the same as the VPViewer status bar.

4.5 Cleaning the cells using the ThermoVac

Note: *The MicroCal VP-ITC cell cleaning device cannot be used in the reference cell. See Section 5.1.*

The ThermoVac, in conjunction with the cell cleaning device, may be used to circulate cleaning and rinsing solutions through the MicroCal VP-ITC sample cell. To clean the VP-ITC cells:

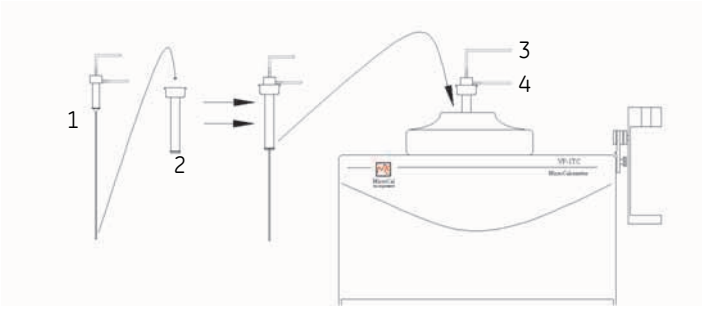

Figure 4-7. Front view of MicroCal VP-ITC.

Table 4-1. Parts in *Figure 4-7*.

Part	Description
1	Cell cleaning apparatus
2	Adapter
3	Soft tubing to beaker of detergent
4	Soft tubing to flask

1 Insert the cell cleaning apparatus into the adapter until the top flange is touching the top of the adapter (see above).

2 Insert the long needle into the sample cell and push down carefully until the O-ring has sealed.

3 Immerse the end of the upper tubing of the cell cleaning apparatus into a beaker of 200-400 mL of 20% Contrad 70.

4 Connect the end of the lower tubing to a one liter vacuum flask through the #8 rubber stopper.

5 Attach the side arm of the vacuum flask to the vacuum port on the ThermoVac. See *Figure 4-8* below.

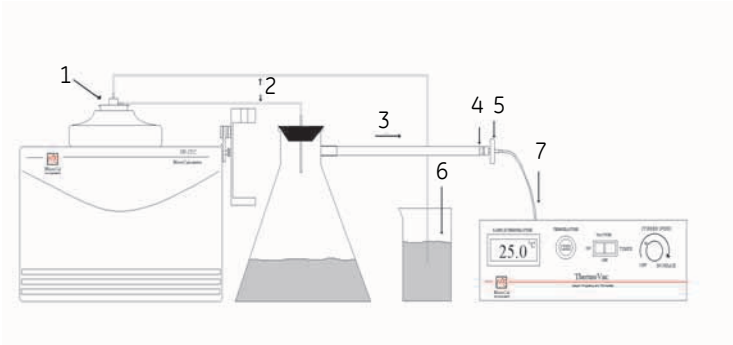

Figure 4-8. VP-ITC cell cleaning.

Table 4-2. Parts in *Figure 4-8*.

1	Cell cleaning apparatus
2	Plastic tubing
3	To vacuum pump of Thermovac
4	Hose with Luer lock connector
5	In-line filter
6	Detergent solution
7	Vacuum port

6 Turn on the ThermoVac vacuum pump. The vacuum will pull the detergent solution from the beaker, through the cell and into the waste flask.

NOTICE
If the level of fluid in the waste flask reaches the level of the side arm, the fluid will be drawn into the ThermoVac pump and will cause damage to the pump. Do not allow the level of fluid in the waste flask to reach the side arm.

7 Once sufficient detergent solution has passed through the cell, remove the hose from the detergent solution and rinse it off using a plastic water bottle. Then place the hose into another beaker containing 200-400 mL of water for rinsing.

8 After rinsing with water, remove the tube from the rinse water and allow time for the vacuum to drain the fluid out of the hoses, then remove the cleaning apparatus from the cell.

9 Remove the remaining water from the cell by using a long needle syringe. If there is any residual soap in the cell reservoir, be sure to rinse it clean with a long needle syringe and water.

Note: *We do not recommend drying the cell before filling with the sample solution, but it should be rinsed twice with the buffer used for the next experiment.*

Note: *A small amount of the buffer used for final rinsing will adhere to the walls of the cell and act to dilute your sample solution. To correct for this, lower the sample concentration entered into the software by 2% if the concentration was measured before the sample was introduced into the cell.*

For further information on cell cleaning, see Section *5.1* of this manual.

4.6 Degassing samples using the ThermoVac

Basic ThermoVac control

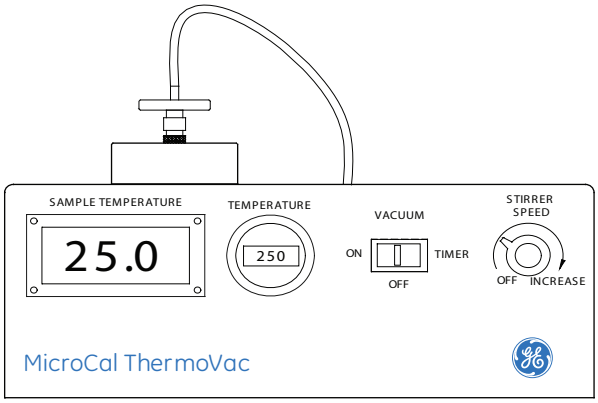

Figure 4-9. Front view of ThermoVac.

Vacuum

The ThermoVac is capable of pulling a maximum vacuum of 28.4 inches of mercury (-0.96 bar).

Push the **VACUUM** switch to the left towards **ON** to activate the vacuum pump. The ThermoVac will maintain the vacuum until you return the switch to the off position.

Push the **VACUUM** switch to the right towards timer to turn the vacuum pump timer on. The timer function will initiate the vacuum and then automatically shut it off in approximately 5 minutes. To end the vacuum cycle early, push the switch to the **ON** position, and back to the center.

Temperature

The temperature dial controls the temperature, in degrees Celsius (°C), for thermostatting the sample chamber. The rightmost digit sets the temperature value in tenths of a degree.

Sample temperature

The sample temperature display shows the current temperature of the sample chamber.

Stirrer speed

The stirrer speed switch activates a rotating magnetic field that will stir the sample when a small magnetic stir bar is placed in the tube containing the sample. The speed ranges from 0 RPM (OFF) to the maximum speed of 800 RPM (full turn clockwise).

Degas cell and syringe samples that may contain dissolved gas to ensure their bubble-free loading. This is particularly important if samples recently were recently refrigerated. A ThermoVac sample degassing and thermostat station is provided with each instrument. The ThermoVac's preset vacuum time of ~ 5 minutes is adequate to degas a sample that is being stirred, but a much longer time is required without stirring. The standard practice is to set the ThermoVac temperature to 1 to 5 degrees below the intended experimental temperature while degassing. If volatile buffers or ligands are being used then solutions should be prepared from degassed or pre-boiled water and stored air-free. If sample solutions contain any undissolved solutes or extraneous solid material of other types, they should be filtered before use.

Note: *To prevent a long equilibration time when running experiments below the ambient temperature, load the sample at a temperature that is at or below the ambient temperature. When using the ThermoVac for an experiment that is below the ambient temperature, set the ThermoVac's temperature to 5 degrees below room temperature to compensate for the temperature change that can occur during transfer to the calorimetric cells.*

Note: *The filling syringe itself will act to change the sample temperature during cell filling. For this reason users may consider using a cold syringe (stored in a refrigerator) to minimize the sample temperature change during cell filling. The temperature of the injection syringe sample has little effect on the equilibration period.*

Note: *The ThermoVac includes a preinstalled bleeder valve on the top of the vacuum cap to allow manual adjustment of the vacuum strength in the degassing chamber. If the vacuum is boiling the sample in the chamber, users should adjust the adjusting knob of the bleeder valve counterclockwise to reduce the vacuum. Any customers with a ThermoVac that does not include this option may request one by contacting their local GE Healthcare office.*

To degas the solutions:

1 Turn on the power switch.

2 Set the desired temperature for the solution.

3 Place your solution to be degassed into a test tube, add a small stir bar and place the tube into one of the open cylinders of the Tube Holder insert.

Note: *To conserve titrant sample for loading into the injection syringe, use the small test tubes provided with the ThermoVac.*

Note: *If you wish to use a tube or beaker larger than will fit into the tube holders you may remove the tube holder by simply lifting it up. Due to the tight fit of the tube holder, it may be difficult to lift it out of the sample chamber. In this case you may use a 3/32" hex (allen key) wrench to turn the screw located at the bottom of the center hole of the tube holder, to lift the tube holder out.*

4 Turn the stirring on and adjust the speed.

5 Turn on the vacuum. Push the vacuum switch to the right towards timer to activate the vacuum for a preset (~5 minutes) duration. Push the switch to the left to manually control the time for the vacuum.

6 Place the vacuum cap on top of the sealing o-ring. The sound of the vacuum pump will change pitch to indicate the vacuum has sealed the Cap to the O-ring. Once the vacuum has sealed, the Vacuum Cap will be held firmly in place, until the vacuum pump shuts off.

7 For the first few minutes after the vacuum pump is turned off, the vacuum in the sample degassing chamber may remain fairly tight making the removal of the vacuum cap difficult. During this period, the easiest way to release the vacuum is to remove the tubing from the rear vacuum port or to twist off (turn counter-clockwise) the in-line filter.

8 Observe the behavior of the sample under vacuum and adjust the bleeder valve as necessary to avoid the boiling of your sample.

4.7 Procedures after a run

The MicroCal VP-ITC was designed to have its power on for extended periods of time. This will keep the system electronics at the normal operating temperature. It is recommended that the power of the MicroCal VP-ITC be turned off during extended periods of down time, such as holidays and vacations. The system should be cleaned after each run, and be left clean when it is turned off.

Tip: *For quick start up leave instrument on, and set to the desired experimental temperature.*

5 Maintenance

Overview

This section provides the user with information on the proper maintenance of the instrument to ensure proper function.

The maintenance requirements of the MicroCal VP-ITC are simple, but essential for quality experiments.

Please read and understand the entire set of instructions prior to performing maintenance. Feel free to contact GE Healthcare with any questions or concerns. The instructions in this manual are designed for a MicroCal VP-ITC user who has used the instrument, and therefore has a basic knowledge of the system.

- The cells, injection and filling syringes must be kept clean. The cells should then be left filled with water or buffer.
- The plunger tips for the pipette injection syringe must be replaced regularly to prevent excess wear that would allow the titrant to leak from the syringe.
- Y-axis calibration should be confirmed annually.
- The temperature calibration should be confirmed annually.
- The syringe height (i.e. position of the stir paddle from the bottom of the cell) should be approximately 3 mm. Once the syringe height adjustment is set, it is not usually a problem, but this distance is custom for each instrument. This means that the user must set the height of newly purchased replacement syringes.

5.1 Cell cleaning

The cells must be cleaned routinely to maintain the high performance of the instrument. Dirty cells will contribute greatly to cell filling problems, repeatability problems and possibly misinterpretation of data. Inadequate cleaning is the cause of most problems experienced with the MicroCal VP-ITC. The importance of adequate cleaning cannot be stressed enough!

The cleanliness of the syringes must not be overlooked, including the injection and filling syringes (see *Section 5.2*).

The MicroCal VP-ITC reference cell does not require special cleaning but should be rinsed and refilled with distilled water once a week. See the buffer rinse instructions below.

There are three methods of cleaning the sample cell. As a general rule, the simplest effective method of cleaning is preferred. The simplest method is manually rinsing the cell with buffer solution using the filling syringe; this is adequate for most samples. The second method involves using the ThermoVac and cleaning device, and should be

performed after every 3-5 experiments, after any sample that precipitates, and at the end of each day's experiments. See section *4.5* for instructions on using the ThermoVac for cleaning the ITC sample cell. The third method involves filling the cell with a cleaning solution and allowing it to soak at an elevated temperature. The first two methods involve some physical agitation, which is necessary to adequately clean the cell. The soaking method generally uses an aggressive cleaning agent is used after the other methods have failed. Rinsing with water after using any cleaning agent is important. If the problems are not resolved after a high-temperature soak, please contact GE Healthcare.

NOTICE
The instrument should be left clean if it will not be used again immediately.

NOTICE
The VP-ITC cells are constructed out of Hastelloy® C-276. Hastelloy is extremely resistant to corrosion by strong bases, but strong acids should be avoided.

NOTICE
If the reservoir overflows during the cleaning procedure, the fluid may contaminate the stir motor bearing and damage it beyond repair. Care should be taken not to overfill the reservoir. If internal contamination is suspected, consult with GE Healthcare personnel for further recommendations.

Buffer Rinse

This rinse should be performed before every run for the sample cell, or once a week for the reference cell. The sample cell should be rinsed with the buffer that will be used for the next run, or water if that is not available. The reference cell should always be rinsed with water.

Empty the cell(s), fill the loading syringe with water or buffer, and inject liquid into the cell until it begins to spill out into the reservoir. Pull the liquid back into the syringe, and then cycle it in and out of the cell several times. Remove all of the liquid from the cell and reservoir, empty the loading syringe, and refill it with fresh water or buffer. Repeat several times.

ThermoVac detergent clean

See section *4.5*.

Vigorous ITC cell cleaning method

When the cells are at room temperature or below, fill the cells with a 20% solution of Contrad 70 (Decon 90), raise the temperature to 65°C, and let stand for one hour. Contrad 70 (Decon 90) is a detergent manufactured by Decon Laboratories and

contains dodecylbenzensulfonic acid, potassium hydroxide, sodium citrate and sodium laurel ether sulfate.

WARNING
Contrad®70 (Decon 90) is highly caustic and is increasingly active at elevated temperatures. Use personal protective equipment for eyes, skin and clothing. All hazards are explained on the MSDS that arrives with the Contrad 70 (Decon 90).

Cool the cells to room temperature, then remove and dispose of the Contrad 70 (Decon 90). Follow with a thorough rinse with distilled water (see section *4.5* for instructions for using the ThermoVac).

CAUTION
Removing liquid from the cell when it is above 40°C may cause the glass syringe to shatter.

5.2 Cleaning the syringes

Cleaning the titration syringe

WARNING!
Methanol is toxic. If ingested, as little as 10 mL can cause permanent blindness by destruction of the optic nerve and 30 mL is potentially fatal. Methanol is volatile and care should be taken to seal vessels that contain methanol.

NOTICE
Take care to avoid bending the syringe during this procedure.

NOTICE
Do not attempt to clean the syringe holder with methanol. This may inadvertently remove the syringe holder's internal lubrication.

1 Disconnect the syringe from the pipette (see *Section 5.3*) and insert the accessory plunger into the top of the syringe.

2 Attach the plastic loading syringe tube to the filling port at the top of the syringe.

3 Insert the tip of the injection syringe into the cleaning solution and draw 2 mL of solution through the syringe.

4 Empty the plastic loading syringe and repeat the above step at least two more times.

5 Insert the tip of the injection syringe into distilled water and draw 2 mL of solution through the syringe.

6 Empty the plastic loading syringe and repeat the above step at least two more times.

7 Insert the tip of the injection syringe into HPLC Grade methanol and draw 2 mL of solution through the syringe.

8 Empty the plastic loading syringe and reattach it to the port. Remove the accessory plunger. Reattach the plastic loading syringe.

9 Apply vacuum to the glass end of the injection syringe using the vacuum tube attachment for approximately 10 minutes to dry the methanol. (BE SURE THE SYRINGE IS DRY)

If it is necessary, the cleaning brush (included with accessories) may be used to scrub the inside diameter of the syringe glass. Additionally, there is a cleaning wire included with the ITC accessories that can be used to clean out the small delivery hole that is located on the very end of the twisted paddle of the titration syringe.

Cleaning the filling syringes

Cleaning the syringes may be accomplished by various methods. The filling syringes are generally soaked in a cleaning solution and briefly scrubbed internally with a soft brush. The filling syringes are then rinsed thoroughly at a sink with distilled water. The syringes are often dried with HPLC grade methanol and a dry air or vacuum source. They may also be left out to air dry but this method is not as reliable as forced drying.

Note: *If methanol is used to clean the syringe, be sure to remove all residue of the methanol from the syringe. Any methanol residue in the syringe will contaminate the next experiment*.

5.3 Replacing the titration syringe

Before replacing the titration syringe, make sure that the pipette plunger is fully retracted by clicking the Open Fill Port button in the Setup/Maintenance tab of VPViewer.

Note: *A bent injection syringe is a common problem; inspect syringes for bends frequently. Injection syringe(s) should always be stored in their wooden box.*

Removing the syringe

1 The first step in removing the titration syringe is to decouple the syringe holder from the pipette, by turning the locking collar until it completely unscrews and gently pulling the holder down until the two pieces come apart (see *Figure 5-1*).

2 Next, remove the bottom locking ring from the syringe using a 0.050" hex driver. DO NOT loosen the top locking ring; it determines the height of the syringe in the cell

and once the top locking ring has been loosened, the height must be reset (see section *5.1*).

3 Gently pull the top locking ring away from the syringe holder. Since it is clamped to the syringe, the syringe will come with it. Pull the syringe all the way out, being very careful not to bend the needle against the inside of the holder. Set the syringe in a safe place.

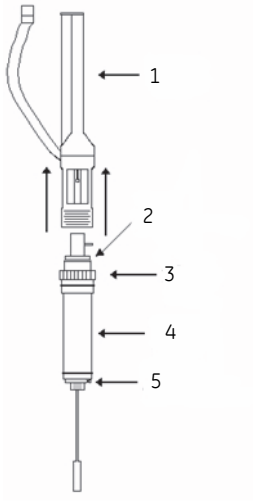

Figure 5-1. Pipette assembly.

Table 5-1. Part in *Figure 5-1*.

1	Pipette injector
2	Upper Syringe clamp
3	Pipette locking collar
4	Syringe holder
5	Lower syringe clamp

Installing a new syringe

The titration syringes are shipped and should be stored with the top locking ring in place. If this syringe has not been used in this instrument before, the top locking ring should be adjusted (see *Section 5.5*).

1 Insert the injection syringe into the syringe holder until the top syringe clamp is firmly seated against the top of the syringe holder, being careful not to bend the needle against the inside of the holder (See *Figure 5-2*).

2 Insert the bottom syringe clamp over the syringe needle onto the glass part of the syringe.

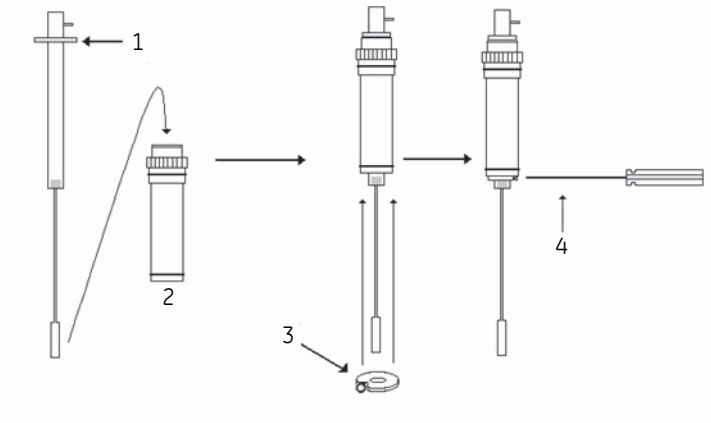

Figure 5-2. Pipette assembly.

Table 5-2. Part in *Figure 5-2*.

1	Pre-mounted syringe clamp
2	Syringe holder
3	Syringe clamp
4	.050 ball point hex driver

3 Make sure the top syringe clamp is still seated against the top of the syringe holder, hold the bottom syringe clamp tightly against the bottom of the syringe holder and gently tighten the set screw using the accessory 0.050" hex driver.

NOTICE
Do not overtighten the set screw, as too much pressure will cause damage. Tighten the screw gradually until the bottom syringe clamp can no longer move freely, then stop tightening.

4 Bring the pipette injector directly above the syringe holder, start bringing the injector down while observing the plunger tip of the pipette injector to insure that it is being inserted into the hole in the glass barrel of the injector syringe, then mate the screws of the pipette injector to the locking collar of the syringe holder.

5 With your fingers, turn the locking collar until it is fully tightened on the pipette.

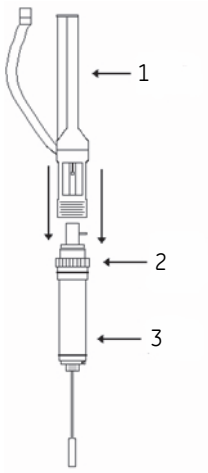

Figure 5-3. Pipette assembly.

Table 5-3. Parts in *Figure 5-3*.

1	Pipette injector
2	Pipette locking collar
3	Syringe holder

When the locking collar is fully tightened there should be only a few threads visible on the pipette.

5.4 Replacing the plunger tip

The plunger tip inside the pipette can become worn over time. GE Healthcare recommends replacing the tip every month or two, or when the tip is visibly worn or damaged.

Note: *A worn plunger tip can cause the injection syringe to leak solution after loading.*

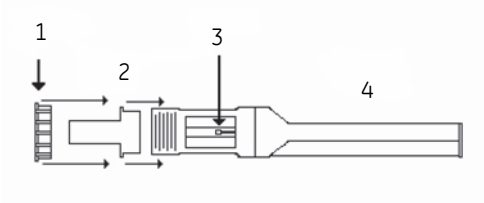

Figure 5-4. Pipette with guide sleeve.

Table 5-4. Part in *Figure 5-4*.

1	Threaded cap
2	Guide sleeve
3	Plunger tip
4	Pipette injector

For this procedure, the syringe holder should be removed from the pipette (See section *5.3*).

NOTICE
Be careful at all times when the pipette is not attached to the syringe holder not to damage or bend the injector screw, as that will make the pipette unusable.

1 Insert the white plastic guide sleeve into the pipette and secure it with the threaded cap, as shown above.

2 Click on the ***Remove Old Tip*** button within the ***Setup/Maintenance*** tab. The tip will move to a location where it is easy to remove.

3 Insert the tip puller tool through the center of the guide sleeve and over the plunger tip, pull it back out. It should grab the plunger tip and pull it off. If it does not, use the manual position controls in the Setup/Maintenance tab to lower the tip 2-3 mm and try again.

4 Click the ***Install New Tip*** button to move the plunger to a convenient location for inserting a new tip.

5 Place a new tip in the tip pusher tool, with the hole up. Slide the tip pusher into the guide sleeve and gently but firmly onto the end of the plunger. Remove the tip pusher. The new tip should be securely seated on the plunger.After a tip is replaced, it will need to be polished to ensure a tight seal with no tip irregularities.

6 Click on the ***Polish New Tip*** button. The injector screw should extend out several centimeters and be hidden by the guide sleeve. This makes it easy to polish the tip without bending the injector screw.

7 Carefully push the glass bore polishing tool over the new plunger tip. Push it back and forth over the plunger tip 30-50 times; it should move more easily as the tip becomes more polished.

8 Click on the ***New Tip Polished*** button. The injector screw will retract into the pipette.

9 Use compressed air to blow any shavings or debris off the tip.

5.5 Syringe height adjustment

Each titration syringe comes with a round 'height disk' (upper syringe clamp) that will ultimately determine the height of the syringe paddle above the bottom of the cell once the syringe and syringe holder is inserted into the ITC sample cell. This is a critical setting for ITC performance, and depends on the exact configuration of the instrument. The proper setting for the ITC syringe height is 2-3 mm off the bottom of the cell. If you order a replacement syringe for the pipette you will need to adjust the syringe height. Also, if you are experiencing excessive noise with stirring and the paddle is not bent, you may wish to readjust the height.

For this procedure, the syringe holder should be removed from the pipette (See section *5.3*).

1 Loosen the set-screw on the upper syringe clamp so that the disk is free to slide up and down on the outer diameter of the syringe glass.

2 Position the syringe in the syringe holder so that the tip of the syringe will not hit the bottom of the cell when the syringe/holder assembly is inserted into the sample cell. This can be easily accomplished by positioning the glass of the syringe so that it is flush to the bottom of the holder, but not lower.

3 Insert the syringe/holder assembly into the sample cell compartment and properly seat the assembly into place.

4 Gently push down on the top of the syringe until you feel it hit the bottom of the cell. If you are unsure then double-check it by lifting the syringe up and lowering it again until the bottom of the cell stops it.

5 Lower the upper syringe clamp so that it is flush to the top of the syringe holder.

6 Tighten the set-screw of the upper syringe clamp so that the disk is fixed to the syringe glass.

7 Raise the syringe by carefully prying up on the upper syringe clamp until it is approximately 2-3 mm (the thickness of a US quarter) higher than the top of the syringe holder.

8 Loosen the set-screw of the upper syringe clamp so that the clamp is free to slide up and down on the outer diameter of the glass bore. Lower the syringe clamp all the way down so that it is again flush to the top of the syringe holder.

9 Tighten the set-screw of the upper syringe clamp. The syringe height is now fixed at 2-3 mm from the bottom of the sample cell.

5.6 Y-axis calibration check

It is recommended that the y-axis calibration be checked every few months to ensure accurate data acquisition. The automatic calibration check routine will send a series of pulses to the cell heaters, dissipating a known power. The offset in the DP as a result of this power is analyzed in comparison to the correct DP offset. It is recommended that Origin for real-time data be enabled for this check.

To begin the y-axis calibration check procedure select VPViewer menu ***ITC:Start ITC Calibration Run:Y Axis Check***.

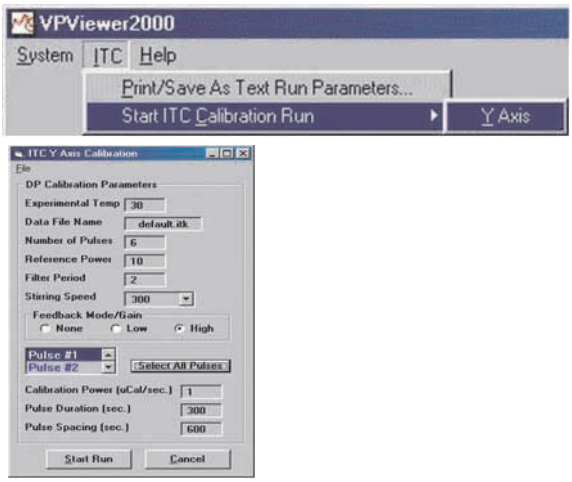

Figure 5-5. Menus.

Once the menu has been selected, the Calibration Pulse Setup Window will appear. This window allows the calibration pulses to be modified. Individual pulse parameters are entered by first selecting a pulse or multiple pulses, then entering the desired parameter value into the pulse parameter boxes (***Calibration Power***, ***Pulse Duration*** and ***Pulse spacing***). Users are encouraged to simply use the default y-axis calibration

parameters. After the run and pulse parameters are entered, clicking on the ***Start Run*** button will start the run. The ITC will equilibrate in the same manner as it would during a titration experiment.

If creating customized calibration parameters, users must be aware of the DP range limits when setting reference power and pulse sizes. The reference power must be low enough to allow all pulses without hitting saturation, and high enough to allow all pulses without crossing zero. If a pulse size is too small, it can show abnormally high error.

After the final equilibration phase has completed, the initial delay will begin and the pulses will be applied as entered. As each pulse completes, Origin will analyze the pulse region and determine the deflection of the baseline as well as the energy (area) of the pulse. The requested power and energy will also be displayed as will a percent error for both power and energy. The reported error in deflection or energy should be less than 1%. If the error is reported as higher than 1%, please contact GE Healthcare.

For a more rigorous analysis, once the calibration is done and the system is thermostatting again, open the ITC Calibrations project. Click on the ***Y-Axis Calibration (DP, uCal/sec)*** button. Origin will ask for the DP check file. Select the data file just created and click ***Open***. The computer will pause for a few moments. If any of the pulses are out of specifications, a pop-up will inform you. It will ask you to save.

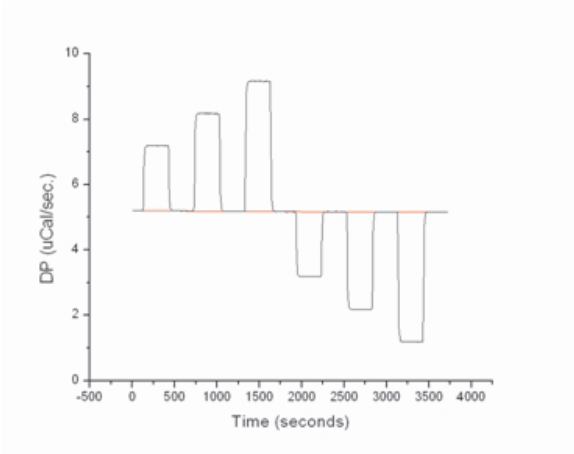

Figure 5-6. Raw data from Y-axis calibration check.

Origin will show four graphs. The upper left graph holds the raw data. The lower two graphs show the energy and power of each pulse. The upper right graph displays the percent error for the energy and power of each pulse. Right-click at the upper right portion of the graph and select "***Go To Window***" from the menu. Check the sizes of the errors. If any of the errors is greater than 1%, please contact GE Healthcare.

5.7 Temperature calibration check

It is recommended that the ITC temperature calibration be checked approximately once every 12 months. The measured temperatures should be within +/- 0.2 degrees of the set temperatures in the VPViewer software. There are two methods of checking the temperature calibration. One requires a calibrated temperature probe; the second uses the temperature standards included with the instrument. The probe method is more accurate but requires the user to purchase the probe and keep it calibrated.

Temperature Probe

This procedure requires a Control Company digital meter and submersible probe or equivalent. The Control Company meter is model #9612; the probe is model #4021. The meter's calibration should be maintained to +/- 0.05°C.

Make sure the cells have been cleaned, and fill the sample cell with water. Residue in the cells or empty cells will yield unpredictable results. Insert the probe into the sample cell and turn the meter on.

1 Use the Temperature control box under the Instrument Controls tab in VPViewer to set the temperature to 30°C.

2 Set the Plot Idle Data flag so that the current data is displayed.

3 When the instrument is thermostatting at the target temperature and the DT is 0,, use the data reader tool and the display from the meter to take temperature data points, as close together as possible.

4 Repeat for the second check point at 70°C. If the error for each is not less than 0.2°C, please contact GE Healthcare for assistance.

It is recommended that users keep a log with the date of the calibration check and the software and meter readings for each temperature point.

Temperature standards

The temperature standards are a pair of tubes, each of which has a reservoir of wax in it. The shorter sealed capillary tube contains Octadecane ($C_{18}H_{38}$). Octadecane has an established melting point of 28.2°C. The longer sealed capillary tube contains n-Hexatriacontane ($C_{36}H_{74}$), which has an established melting point of 75.9°C. Both the low and high temperature transitions are 100% reversible. To use the standards, run a calibration scan, with a tube in each cell, and check that the midpoint of the melting transition for each wax is within ± 0.2°C of the expected value.

1 Make sure the sample and reference cells are clean, and fill them with degassed water.

2 Insert the low temperature capillary tube (shorter) into the sample cell and the high temperature capillary tube (longer) into the reference cell. When facing the machine, the longer tube goes on the left.

3 Select VPViewer menu ITC: ***Start ITC Calibration Run***: ***Temperature Check***. The ITC will thermostat at 22°C, raise the shield temperature, and scan (simulating a DSC)

through low transition temperature region. The DP will be recorded during the scan and saved. It will then heat to 73°C, raise the shield temperature, and scan through the high transition temperature region. The DP will be recorded during the scan and saved.

4 To evaluate the results, open the ITC Calibrations Origin project.

5 Click on the "***Temperature Calibration***" button.

6 Origin will pause for several seconds. Once it has finished, it will ask you to save. The default file name is usually acceptable; it will be ***TCALREPORTYYMMDD***. Press ***ENTER*** to save.

7 Origin will display a final report, with a graph of each melting transition. A text box on each graph gives the instrument serial number, time and date that the report was generated, expected midpoint, actual midpoint, and error. It will then say if the result is within specifications or not. If the results are not within specifications, please contact GE Healthcare for instructions.

5.8 Replacement of fuses

WARNING!
Always disconnect power from the instrument before replacing fuses.

WARNING!
Replace fuses ONLY with same type fuses. Several spare fuses are provided with the original shipment and the power receptacle is labeled with the correct type.

The MicroCal VP-ITC contains two fuses, found in the power receptacle at the rear of the instrument, below the power switch and above the plug. If the fuses repeatedly blow, unplug the instrument and contact your local GE Healthcare representative.

6 Troubleshooting

Problem	Action
Power LED not lit	Check that power is plugged in and turned on.
	Check Main VP-ITC fuses.
	Check that the control software is running and properly initialized.
Instrument is running; Demo Mode	Check seating of A/D and D/A boards in computer. Check that the control software is installed and properly initialized.
Software reports networking errors	Unplug network port from controller, reboot, and reload the control software.
Data shows problems	Refill the reference cell.
	Clean the cell and titration and loading syringes.
	Check that the titration syringe needle is straight.
	Run a known sample (water or standard test kit).
	If these steps do not resolve the problem, see section "*Section 6.1 How to get help, on page 64*".
Control software reports initialization errors, communication problems, or hardware errors not covered in this manual	Contact your GE Healthcare service representative.

This section contains tips and information for troubleshooting the MicroCal VP-ITC. Many problems in instrument loading and cleaning show characteristic baseline and titration abnormalities, and knowing which system is affected can greatly speed the resolution of the issue. Some problems can easily be corrected by the average user; some may be corrected by the more advanced user, and some require the expertise of a GE Healthcare service technician. The GE Healthcare service department is happy to provide any advice, parts, or service that may be necessary.

6.1 How to get help

Please contact us for any instrument or data analysis questions or issues you may have. For contact information for your local office, please visit: www.gelifesciences.com/contact, or for MicroCal-specific information, visit: www.gelifesciences.com/microcal.

When e-mailing for technical assistance, if possible, please attach a recent data file(s) (*.itc, raw ITC data file) that demonstrates the problem. Also, please include all details that may be relevant to the problem. For instance, where the problem or question relates to post run data analysis, it is best to attach both the raw data file (*.itc) and the Origin project file (*.opj) generated during data analysis.

There are two general categories of troubleshooting for the MicroCal VP-ITC and its operation. The most extreme category is when a system is not working at all. Problems that prevent users from operating the instrument require immediate consultation with a GE Healthcare technician. Customers should not attempt to repair the hardware or software unless instructed to do so by a GE Healthcare service representative.

The second, and less extreme general category of a problem is when a MicroCal VP-ITC instrument is functioning, but is not operating within its normal performance specifications. Large baseline drifting, non-repeatable control peaks (water/water) and/or an increase in short term noise level are examples of performance problems. These problems may be corrected by the operator in most cases. For these types of performance issues it is recommended that customers carry out the following minimum diagnostic steps prior to requesting service:

1. Thoroughly clean the cells. Do not assume they are clean; build-up or unexpected sample residue will cause problems. As a minimum, use the provided cell cleaning apparatus to pass 500 mL of 20% Contrad 70 in water solution, followed by 500 mL of cold water rinse, through the sample cell. Discretion may call for a more rigorous cleaning procedure.
2. Using a clean Hamilton syringe, refill both the reference and sample cells with filtered degassed water.
3. Thoroughly clean the titration syringe or use a different syringe and load it with water.
4. Activate the extended data mode by clicking the Extended Data Mode box in the ***Setup/Maintenance*** tab. While the software is in the extended data mode, the ITC data files will contain all available information produced by MicroCal VP-ITC. This additional information will often help the MicroCal technician diagnose problems.
5. Carry out a minimum of 25, 10µL injections of water into water.

If, after completion of the steps listed above, the ITC performance is not corrected, please contact the service department for help. The water runs should be provided to the GE Healthcare service technician for evaluation. Following the evaluation, a representative from the service department will contact you with comments and recommendations.

7 Reference information

7.1 Instrument Specifications

Performance Specifications

Characteristic	Data
Operating Temperature Range	2 - 80°C
Response Time	20 seconds
Cell Design	1.4 mL, coin-shaped
Titration Syringe	290 µL
Smallest Injection Size	0.1 µL
Stirring Rate	0 - 1000 r.p.m.

Physical Specifications

Description	Data
Cell Material	Hastelloy® Alloy C-276
Dimensions	Calorimeter: 20 x 44 x 38 cm (8 x 17 x 15 in.) Controller: 15 x 36 x 41cm (6 x 14 x16 in.) Monitor: 38 x 40 x 20 cm (15 x 15.5 x 8 in.)
Weight	Calorimeter: 12 kg / 25.5 lbs Controller: 9 kg / 20 lbs Monitor: 5 kg / 10 lbs

For operation, the MicroCal VP-ITC with a computer controller requires about 1.2 meters of normal bench space (ca. 70 cm wide).

Electrical specifications

Electrical specifications are for the calorimeter only.

Characteristic	Data
Voltage	100 to 240 Volts grounded
Frequency	50 / 60 Hz

Characteristic	Data
Power	120 Watts
Fuses (2)	1.00 A, 250 V, Time Delay
Output	Secondary/Data Connection Only
Protective Earth Terminals	Internal/external marked
Mode of Operation	Continuous
Classification	Class I

Environmental conditions

Condition	Characteristic	Limits
Operation	Temperature	10°C to 28°C
	Humidity	≤ 70% RH
	Atmospheric pressure	700 to 1060 hPa
Storage (no liquid in cells)	Temperature	-20°C to 60°C
	Humidity	≤ 70% RH
	Atmospheric pressure	700 to 1060 hPa

7.2 Ordering information

for ordering information, visit: www.gelifesciences.com/microcal

For local office contact information, visit
www.gelifesciences.com/contact

GE Healthcare Bio-Sciences AB
Björkgatan 30
751 84 Uppsala
Sweden

www.gelifesciences.com/microcal.

GE Healthcare UK Ltd
Amersham Place, Little Chalfont, Buckinghamshire, HP7 9NA, UK

GE Healthcare Bio-Sciences Corp
800 Centennial Avenue, P.O. Box 1327, Piscataway, NJ 08855-1327, USA

GE Healthcare Europe GmbH
Munzinger Strasse 5, D-79111 Freiburg, Germany

GE Healthcare Japan Corporation
Sanken Bldg. 3-25-1, Hyakunincho, Shinjuku-ku, Tokyo 169-0073, Japan

imagination at work

28-9639-79 AA 01/2010